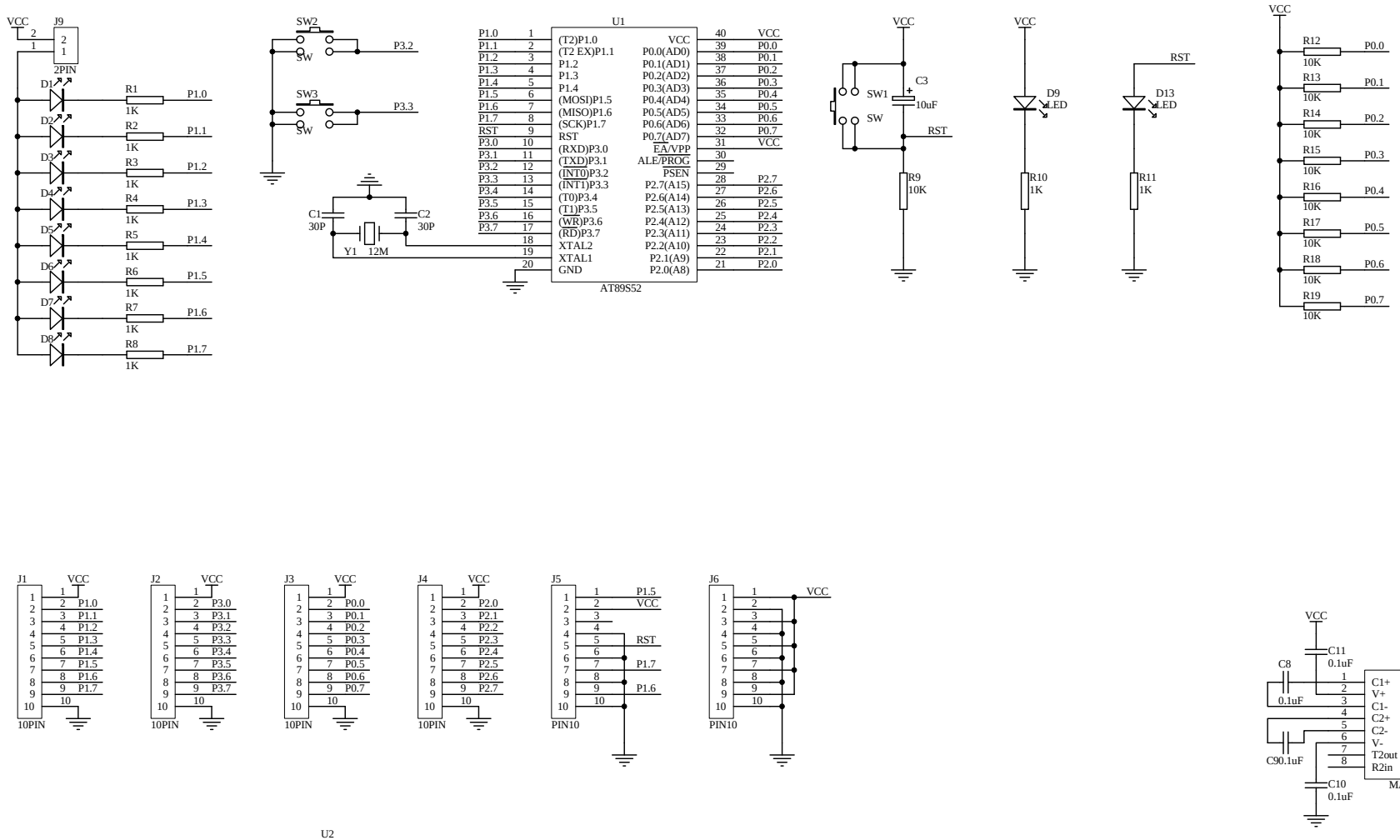

Title		
Size B	Number	Revision
Date: 25-Oct-2009	Sheet of	
File: E:\My Documents\电路设计\开发板\51系列\Design\M0MyDesign.ddb	Drawn By:	